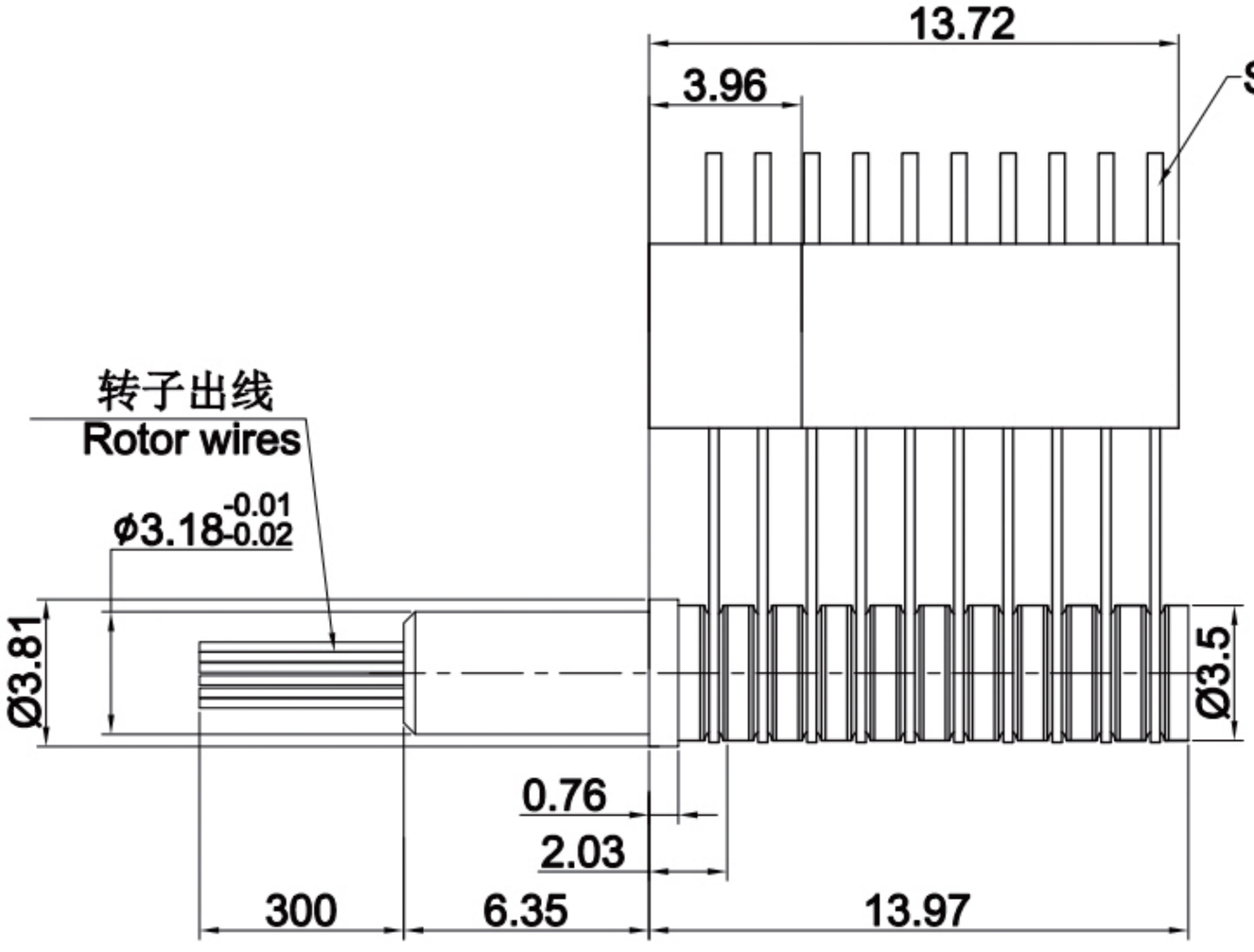
13.72
3.96
Stator insert
转子出线
Rotor wires
ø3.18 -0.01 -0.02
Ø3.81
Ø3.5
0.76
2.03
300
6.35
13.97

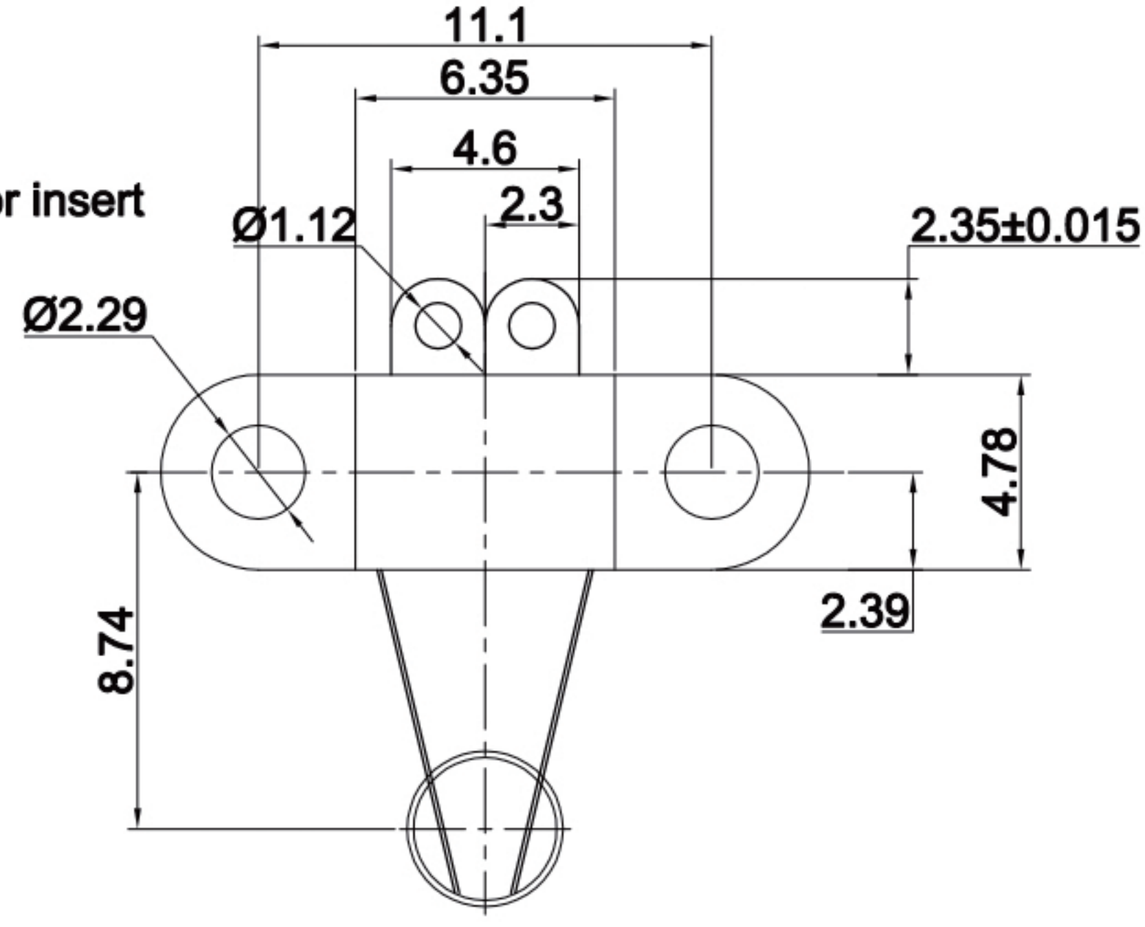
11.1
6.35
4.6
2.3
Ø1.12
2.35±0.015
Ø2.29
4.78
8.74
2.39